California Faucets®

Descanso™

WIDESPREAD LAVATORY FAUCET

CF-3002
CF-3002K
CF-3002F

Features

- *5-7/16" spout center to center*
- *1/4 turn ceramic disc cartridge(s)*
- *Flexible braided hoses for ease of installation*
- *∅ 1-1/4" all brass touch style pop up drain assembly*
- *1.2 gpm (4.5 L/min) max flow rate*
- *Solid brass construction*
- *Over 30 finishes including 15 PVD finishes*

(CF-3002K SHOWN)

Codes/Standards

Product meets or exceeds the following:

- *ASME A112.18.1/CSA B125.1*
- *NSF/ANSI 61 & NSF/ANSI 372*
- *CEC & DOE*
- *EPA WaterSense High Efficiency Lavatory*
- *ADA compliant*

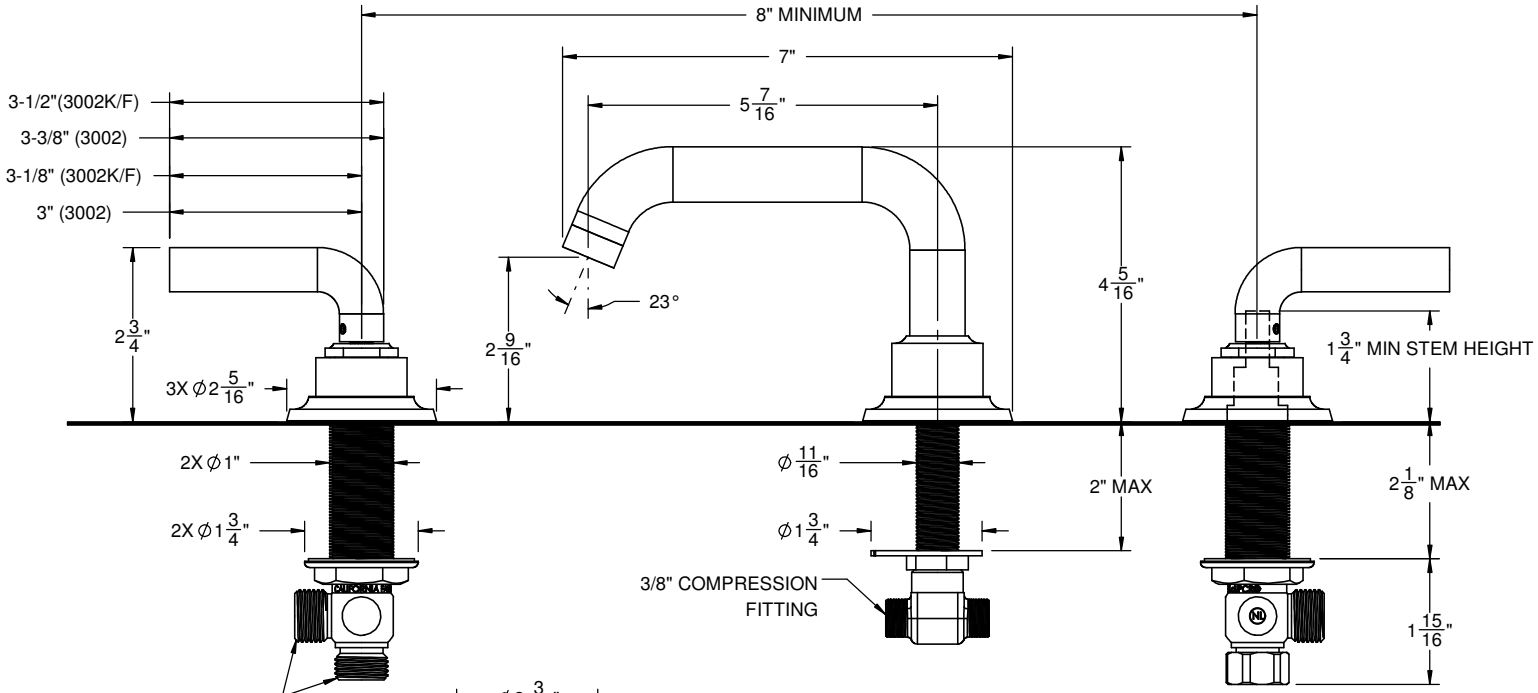

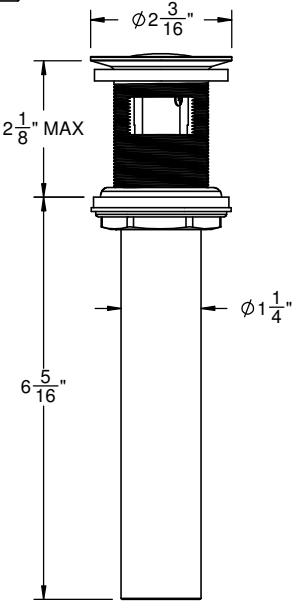

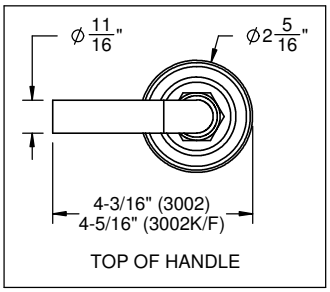

THROUGH-HOLE SPECIFICATIONS

	MIN	RECOMENDED	MAX
SPOUT:	∅1"	∅1-1/8"	∅1-1/2"
VALVE:	∅1"	∅1-1/8"	∅1-1/2"

SPECIFICATIONS SUBJECT TO CHANGE WITHOUT NOTICE

ALL DIMENSIONS SHOWN TO NEAREST 1/16"