California Faucets®

JALAMA

DECK TRIM DIVERTER

TO-73.1
WE-TO-73.1

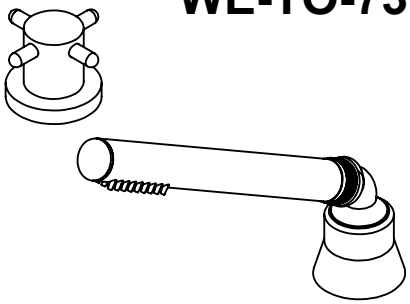

Features

- *Over 30 finishes including 14 PVD finishes*
- *Solid brass construction*
- *Handshower: Maximum flow rate: 2.5 gpm (9.5 L/m) or 2.0 gpm (7.6 L/m) for "WE" (water efficient) model*
- *Handshower: 1/2" MIP inlet with self-clean rubber jets*
- *Handshower elbow: 1/2" FIP swivel nut with1/2" MIP inlet*
- *Valve: Anti-siphon backflow prevention with 1/4 turn between outlet ports*
- *Hose: 84" Black poly braided hose. Provides durable, quiet & no damage to trim finish during operation*
- *Comes as a complete set with trim and valve*
- *For additional product offerings, see www.californiafaucets.com*

Codes/Standards Applicable

Meets or exceeds the following at date of manufacture:

- *ASME A112.18.1/CSA B125.1*

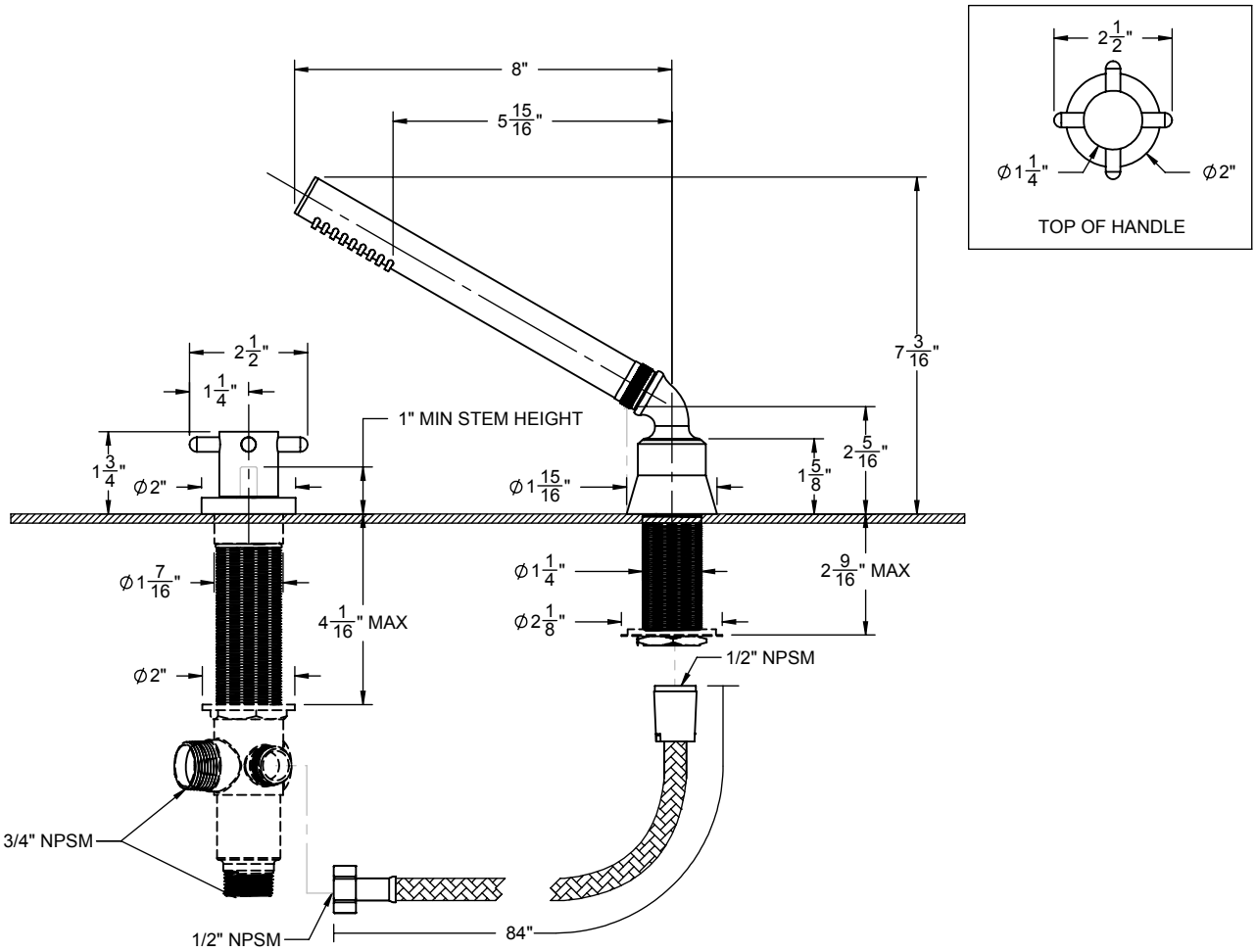

THROUGH-HOLE SPECIFICATIONS

	MIN	RECOMMENDED
SHOWER:	Ø 1-1/4"	Ø1-1/4"
VALVE:	Ø 1-7/16"	Ø1-1/2"

ALL DIMENSIONS SHOWN TO NEAREST 1/16"